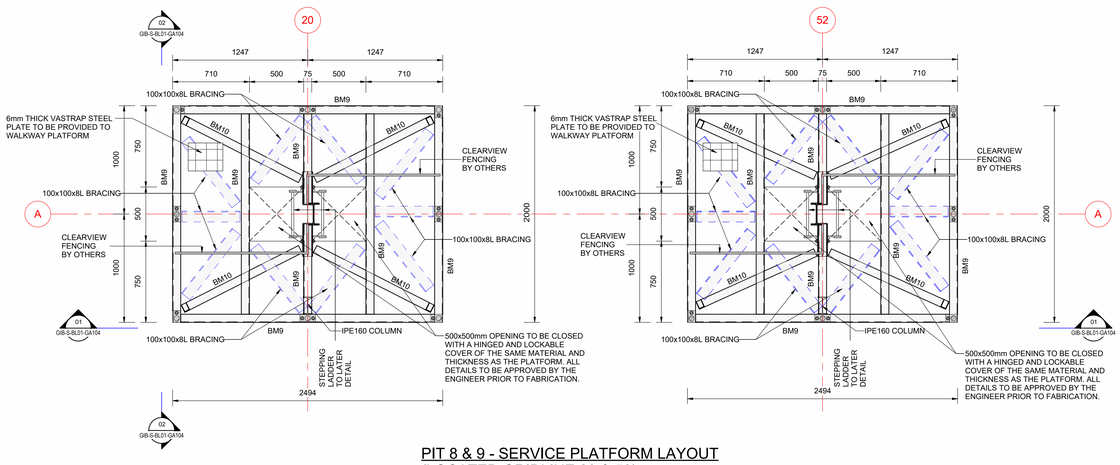

PIT 8 & 9 - SERVICE PLATFORM LAYOUT (LOCATED GRIDLINE 20 & 53)

SCALE: 1 : 20

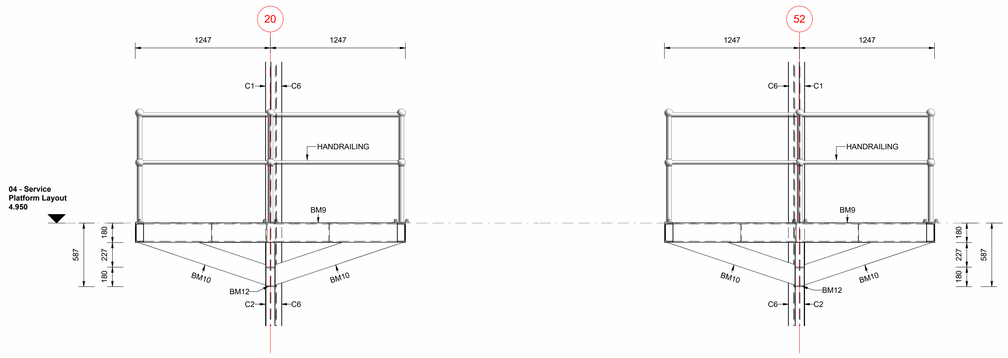

PIT 8 & 9 - ELEVATION 01 - SERVICE PLATFORM

SCALE: 1 : 20

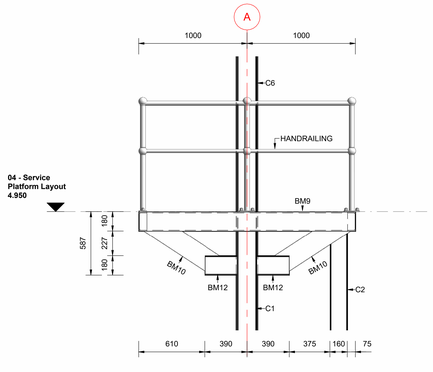

PIT 8 & 9 - ELEVATION 02 - SERVICE PLATFORM

SCALE: 1 : 20

BEAM SCHEDULE

TYPE MARK	TYPE NAME	MEMBER PHASE
BM1	IPE140 BEAM	EXISTING STEEL MEMBER
BM2	225x75x20x2.5 CFLP BEAM	EXISTING STEEL MEMBER
BM3	IPE160 BEAM	EXISTING STEEL MEMBER
BM4	IPE160 EXTENTION BEAM	NEW STEEL MEMBER
BM5	100x100x8L BRACING	NEW STEEL MEMBER
BM6	203x133x25 UB NEW BEAM	NEW STEEL MEMBER
BM7	152.4x3.0 CHS BEAM	NEW STEEL MEMBER
BM8	IPE160 EXISTING BEAM	EXISTING STEEL MEMBER
BM9	180x75x20PFC BEAM	NEW STEEL MEMBER
BM10	180x75x20PFC SLANTED BEAM	NEW STEEL MEMBER
BM11	203x133x25 UB STRUT	NEW STEEL MEMBER
BM12	IPE180 BEAM	NEW STEEL MEMBER

COLUMN SCHEDULE

TYPE MARK	TYPE NAME	MEMBER PHASE
C1	IPE180 COLUMN	EXISTING STEEL MEMBER
C2	IPE160 COLUMN	EXISTING STEEL MEMBER
C3	305x165x40UB NEW COLUMN	NEW STEEL MEMBER
C4	IPE160 NEW COLUMN	NEW STEEL MEMBER
C5	160x80x4RHS NEW COLUMN	NEW STEEL MEMBER
C6	IPE200 NEW COLUMN	NEW STEEL MEMBER

ALL DIMENSIONS AND LEVELS ARE TO BE VERIFIED ON SITE BY THE CONTRACTOR BEFORE COMMENCING ANY WORK.

This document and all the information thereon remains the property of GIBB (Pty) Ltd. and may not be copied, reproduced or transmitted in part or in full without the written consent of GIBB (Pty) Ltd. This document should not be relied on nor used in circumstances other than those for which it was originally prepared and for which GIBB (Pty) Ltd. was commissioned, as defined on this document. Refer to the contract for full terms and conditions.

GIBB (Pty) Ltd. shall not be liable for the consequences of using this document other than for the purpose for which it was commissioned. Any user and any other person using or relying on the document for such other purpose, will by such use or reliance be taken to confirm his agreement to indemnify GIBB (Pty) Ltd. for all loss or damage resulting there from.

ON ORIGINAL

0 5 10 15 20 25 30 40 50 60 70 80 90mm

GENERAL NOTES:

FOR GENERAL NOTES REFER TO DRAWING J42000_33-GIB-S-BL-GA001

ISSUED FOR TENDER

No	Date	Details	Chkd	Appd
B	2026-10-29	ISSUED FOR TENDER	N.P.	M.DP
A	2026-10-08	ISSUED FOR TENDER	N.P.	M.DP

Revisions

Client
Be moved
prasa PASSENGER RAIL AGENCY OF SOUTH AFRICA
Umjantshi House 30 Wolmarans Street BRAAMFONTEIN
Private Bag X101 BRAAMFONTEIN, 2017 Tel +27 (0)11 013 1607

Architect
N/A

GIBB INFRASTRUCTURE & TRANSPORTATION
Head Office - Johannesburg
3rd Floor, Building H
19th North Street, Houghton Estate
Rosebank, 2196

Project
BRAAMFONTEIN ROLLING STOCK PROVISION OF EMU SAFE ROOF ACCESS

Description
STRUCTURES
PIT 8 & 9 - SERVICE PLATFORM LAYOUT AND DETAILS

Approved By
M. Du PLOOY Pr Eng. Tech 201570355

Drawn By	Designed By	Reviewed By
Z. SIKADE	N. PILLAY	M. DU PLOOY

Scale	Date
AS INDICATED	2026/10/29

PRASA Dwg. No

Rev: B

Project No

GIBB Dwg. No: J42000_33 - GIB-S-BL01-GA104

C:\Users\zsikade\Desktop_gibb-s-ga\Documents\4. drawings\out\J42000_33 - PIT 8&9 EMU ROOF TRACK ROOF ACCESS.rvt